MUNICIPAL STANDARDS

CITY OF DEWITT, MICHIGAN

Prepared by:
Capital Consultants, Inc.
725 Prudden Street
Lansing MI 48906

Amended August 6, 2007

At a Regular Meeting of the City Council of the City of DeWitt, the following Resolution was offered by Councilmember James Lancaster, seconded by Councilmember Richard Reust, and unanimously approved by the City Council (Councilmember James Rundborg was absent):

> To approve the following prepared Resolution allowing the record of the October 15, 2001 meeting to reflect the second reading and adoption of an amendment to Chapter 2, Article VIII of the City Code, entitled Municipal Publications:

WHEREAS, Councilmember Rundborg has introduced an amendment to Chapter 2, Article VIII entitled Municipal Publications of the City Code; and,

WHEREAS, the purpose of this amendment is to permit the September, 2001 version of the Municipal Standards to be adopted which regulates the construction of sidewalk, storm sewer and streets in the City of DeWitt; and,

WHEREAS, the amendment was introduced at the October 1, 2001 Council Meeting.

NOW, THEREFORE, BE IT RESOLVED that by adoption of this Resolution the record of the October 15, 2001 Council Meeting shall reflect the second reading and adoption of an amendment to Chapter 2, Article VIII, Municipal Publications, of the City Code.

BE IT FURTHER RESOLVED that this amendment shall be effective upon publication in the October 21, 2001 edition of the *DeWitt-Bath Review.*

TABLE OF CONTENTS
MUNICIPAL STANDARDS
CITY OF DEWITT, MICHIGAN

CHAPTER 1 – GENERAL INFORMATION	PAGE
Introduction	1-1
Definitions	1-1
Regulatory Requirements	1-2
Subdivision Control Act	1-2
Inland Lakes and Streams Act	1-2
Wetland Protection Act	1-2
Floodplain Regulatory Authority	1-2
Soil Erosion and Sediment Control Act	1-2
State and Local Building Codes	1-2
Underground Utilities Act	1-2
City Codes and Ordinances	1-3
Sanitary Sewers and Water Mains	1-3
Utility Locations within Street Rights-of-Way	1-3
Easements	1-3
Administrative Procedures for Municipal Projects	1-4
CHAPTER 2 – STANDARDS OF CONSTRUCTION FOR UTILITY COMPANY CONSTRUCTION	
Utility Construction Within Municipal Street Rights-of-Way	2-1
Construction Operations	2-1
CHAPTER 3 – STANDARDS OF DESIGN	
Streets	3-1
Storm Sewers	3-4
Site Grading	3-7
Table of Standard Materials	3-9
CHAPTER 4 – GENERAL CONSTRUCTION REQUIREMENTS	
General Construction Requirements	4-1
CHAPTER 5 – TECHNICAL SPECIFICATIONS	
Index	5-1
Technical Specifications	5-2
APPENDIX A – Standard Details	

CHAPTER 1

GENERAL INFORMATION

INTRODUCTION

The design and construction standards for subdivision and land development contained in this publication are intended as guidelines to be used by the developer in the preparation of preliminary and final plats, site condominium developments, development in conjunction with local zoning and subdivision ordinances, the State of Michigan Land Division Act, and other applicable state and local regulations to produce residential and commercial developments which conform to the Municipality's requirements.

Where reference is made to specifications and standards, it is understood to mean the latest revision.

DEFINITIONS

(1) OWNER OR DEVELOPER – A natural person, firm, corporation, association, partnership, or other entity who proposes subdivision or other land development and/or municipal improvements, and who either has an ownership interest therein or is authorized to act as an agent with respect thereto for an entity having such ownership interest.

(2) MUNICIPALITY – City of DeWitt, Michigan.

(3) ENGINEER OR MUNICIPAL ENGINEER – The person, firm, or corporation empowered by the Municipality to provide the required engineering review and inspection services.

(4) DESIGN ENGINEER – The engineer engaged by the developer to prepare platting documents and plans and specifications for subdivision or plans and specifications in non-platted land developments.

(5) CONTRACTOR – The person, firm, or corporation engaged by the developer for construction services in conjunction with the proposed land development.

(6) STANDARDS – "Municipal Standards" hereafter, **the minimum standards** for design and construction of subdivisions and land development projects.

(7) MDOT – Michigan Department of Transportation

(8) MDEQ – Michigan Department of Environmental Quality

(9) AUTHORITY – The Southern Clinton County Municipal Utilities Authority

CITY CODE AND ORDINANCES – Chapter 38 of the City Code outlines the requirements for land division within the City. Chapter 2 of the City Code authorizes the adoption and publication of municipal standards for Streets, Storm Sewers and Sidewalks. Chapter 66 of the City Code references the sources of the standards for utilities.

SANITARY SEWERS AND WATER MAINS – Sanitary sewers shall be constructed in accordance with the requirements of the Southern Clinton County Municipal Utilities Authority. A copy of the Sanitary Sewer Standards is available at the Authority.

The Lansing Board of Water and Light provides water service to the City of DeWitt. Extensions of water mains must meet the requirements and standards of the Board.

UTILITY LOCATION WITHIN STREET RIGHT-OF-WAY – The utilities listed below shall be constructed in the designated location within street rights-of-way unless existing utility locations preclude conformance to the standard locations.

Sanitary Sewers – south or west side, 7 feet from the centerline of the right-of-way.

Storm Sewers – north or east side, 7 feet from the centerline of the right-of-way.

Water Mains - north or east side, 22 feet from the centerline of the right-of-way.

Gas Mains – south or west side, 38 feet from the centerline of the right-of-way.

Other Utilities - as approved by the Municipal Engineer. Requirements of the Clinton County Road Commission shall be considered in locating utilities.

EASEMENTS – Where easements are required, it is the responsibility of the Developer to secure all easements for streets and utilities. Easements and deeds of grants shall be transferred to the Municipality prior to acceptance of the project.

ADMINISTRATIVE PROCEDURES FOR MUNICIPAL PROJECTS:

I. PRELIMINARY PLAT/SITE PLAN APPROVAL:

A. Building & Zoning and City Engineer
B. Formal request for Municipal Improvements Agreement
C. Agreement Executed
   1. By review of the City Attorney
   2. By the City Council

II. COSTS

A. Developer provides estimates of cost of municipal project
B. Design Engineer verifies estimated costs
   Date: _____
   Amount: _____

III. CONSTRUCTION PLAN REVIEW:

A. 2% of construction cost deposited with City of DeWitt
   Date:_____
   Amount: _____

B. Performance Irrevocable Letter of Credit placed in the City Clerk's file
   Date: _____
   Amount: _____
   Expiration Date: _____

IV. APPROVAL/PERMIT PROCEDURES

C. Developer delivers preliminary plans to the City of DeWitt
D. Preliminary plans forwarded by the City to the City Engineer
E. City Engineer review plans and provides review comments to the City

V. DEPOSIT FOR CONSTRUCTION ADMINISTRATION

A. City Treasurer receives 6% inspection deposit by developer
   Date: _____
   Amount: _____

VI. CONSTRUCTION

A. Pre-Construction meeting
   1. Verification of Insurance Certificate
   2. Verification of Permits
   3. Miss Dig notification

B. Actual construction begins
C. Inspection completed by City's Engineer
D. The Municipality accepts improvements

VII. FINALIZATION BY MUNICIPALITY:

A. City Engineer certifies completion of project and forwards certification to the City
B. Acceptance by City of DeWitt

CHAPTER 2

STANDARDS OF CONSTRUCTION

UTILITY COMPANY CONSTRUCTION

STANDARDS OF CONSTRUCTION-
UTILITY COMPANY CONSTRUCTION
WITHIN MUNICIPAL STREET RIGHT-OF-WAY

GENERAL

This specification covers the requirements of all water main, natural gas, telephone, cable television, or other public utilities, and private persons or corporations in connection with construction operations within Municipal street rights-of-way.

All work shall be carried on in a neat and satisfactory manner and interference with pedestrian, bicycle and vehicular traffic shall be kept to a minimum. No Street may be closed without prior permission from the authority having jurisdiction. The Contractor shall be responsible for providing, installing, and maintaining traffic control signs, lights, and barricades as required by the MDOT Manual of Uniform Traffic Control Devices.

Whenever reference is made to specifications other than those contained herein, said specifications shall apply and be binding as if fully repeated herein. Unless as otherwise specified, all work shall conform to applicable provisions of the "1990 Standard Specifications for Highway Construction", of the Michigan Department of Transportation (MDOT), or the latest version thereof.

The Contractor shall notify the Municipality and Miss Dig (800-482-7171) at least 72 hours prior to commencing construction operations, unless the situation warrants immediate action.

Where applicable, construction plans shall be submitted to the Municipality for approval at least 30 days in advance of the proposed initiation of construction operations.

CONSTRUCTION OPERATIONS

In general, construction operations shall be in accordance with the applicable sections of these "MUNICIPAL STANDARDS".

1. Pavement Crossings – Unless otherwise specified, where a utility line crosses the entire width of a permanent pavement, the Contractor will be required to bore, bore and jack, or tunnel in accordance with the requirement of the MDOT. If open cutting of the permanent pavement is allowed, the pavement shall be saw cut prior to excavation and backfilled and compacted in accordance with the requirements of MDOT.

2. Pavement Replacement – Where weather conditions allow, pavement shall be replaced upon completion of construction operations. Pavement replacement materials shall be of the same material and thickness as the existing pavement. During freezing weather, cold patch shall be used until permanent pavement can be replaced. The utility, private persons or corporations shall be responsible for maintaining the cold patch until the permanent pavement can be replaced.

CHAPTER 3

STANDARDS OF DESIGN

STANDARDS OF DESIGN – STREETS

SCOPE

These standards establish the minimum requirements for the design of streets in the Municipality.

PLANS AND SPECIFICATIONS

1. The plans and specifications shall be prepared by a professional engineer licensed in the State of Michigan.

2. Plans shall consist of a cover sheet showing a location map and site plan of the proposed project, plan and profile sheets covering all the proposed street construction, and a standard detail sheet. Plan sheet size shall be 24x36. Plan scale shall be 1 inch = 40 feet horizontally and 1 inch = 4 feet vertically.

3. Elevation shall be based upon U.S.G.S. datum. Elevations based upon assumed datum will not be approved.

4. Plan profiles shall indicate existing and proposed ground levels and stationing.

5. Four (4) sets of plans and specifications shall be submitted by the Developer to the Municipality for preliminary approval. All plans submitted for approval shall be sealed by the licensed engineer in charge of design. Modifications required to meet the Municipal Standards, if any, will be noted on two (2) sets, with one such set returned to the Developer for final corrections with 90 days of receipt.

6. Six (6) sets of final plans shall be submitted by the Developer to the Municipality for approval. All plans and specification submitted for approval shall be sealed by the licensed engineer in charge of design.

7. The Developer will be responsible for securing all State and Local construction permits required for street construction.

8. Three (3) sets of Record blueline prints and 1 set of clean reproducible "record drawings" on seoia paper, and a computer generated 3 ½ - inch floppy disc with the same, having each drawing saved as a separate file shall be submitted to the Municipality upon completion of the construction project. Utility information for as-built projects shall be provided in the following format:

CITY OF DEWITT
AUTOCAD FILE INFORMATION

Version:	AutoCad 14 or 2000
File:	Single file showing all as-built sections
Orientation:	North up
Units:	AutoCad Engineering
Layers:	

Information	Name	Line Type	Color	Text Height
Right-of-Way	ROAD	Continuous	3	
Road Name	ROADNAME	Continuous	2	15' – 0"
Water Main	WM	Hidden	9	
Water Main	WMTEXT	Continuous	4	20' – 0"
Sewer Main	SEWER	Hidden	9	
Sewer Main Text	SWRTEXT	Continuous	4	20' – 0"
River Banks	RIVER	Continuous	5	
Section	SECTION	Center	8	

9. All required easements must be secured and recorded by the Developer. A copy must be filed with the Municipality.

STANDARDS OF DESIGN – STREETS AND ROADWAYS

1. Subsurface Soil Conditions – The Developer shall provide sufficient soil boring and other information to accurately describe the prevailing soil conditions under proposed streets. The minimum soil boring depth shall be five (5) feet below the plan road grade, unless unstable soil conditions are encountered.

2. Curb and Gutter – All streets and roadways shall include concrete curb and gutter of the cross section indicated on the standard detail. In general, it is the intent that a rolled curb section be used in residential developments. Bituminous curb will not be allowed. On local streets, the minimum street width shall be 31 feet back to back of curb. Street width on major streets shall conform to the "Uniform Criteria for Major Streets" as adopted by the Michigan Department of Transportation. At all intersections, the minimum curb radius shall be 25 feet, unless otherwise approved.

3. Sidewalk – Concrete sidewalks shall be five feet wide and shall be located one foot inside right-of-way line. At all intersections of sidewalks and curb and gutter, appropriate pedestrian ramps shall be MDOT Type 1.

The maximum allowable sidewalk grade shall be five (5) percent. Sidewalk shall have a cross slope of ¼ inch per foot away from the property line. Sidewalks shall project one inch above finished grade. In cut sections, the maximum sidewalk elevation shall be one foot above the street centerline elevation. Sidewalk shall be 4 driveways shall be 10 inches.

4. Grade, Horizontal and Vertical Alignment – The minimum vertical grade on any street or roadway shall be 0.50 feet per 100 feet and the maximum grade on any street or roadway shall be 5.0 feet per 100 feet of length. In general, the minimum length of a vertical curve shall be 100 feet, unless otherwise dictated by site topography. Intersections of streets shall be made perpendicular to each other.

5. Driveway Approaches – All driveway approaches between the curb and gutter and sidewalk shall be concrete; residential sections shall be 7 inches thick and 10 inches for commercial approaches. The maximum grade on driveway approaches shall be twelve (12) percent. The width of the driveway curb cut shall conform to the standard detail.

6. Utility Locations Within Street Right-of-Way – Utility locations shall conform to the requirements outlined in Chapter 1 of these standards.

7. Street Surface Materials and Pavement Thickness –

   a. Pavement design for **major streets** shall reflect the increased traffic volume and higher axle loads and shall be subject to approval by the Municipality.

   b. **Local Streets** shall consist of 8 inches of compacted MDOT 22A gravel and 385 pounds per square yard (3 ½ - inches) of MDOT bituminous material constructed in two lifts; 220 lbs/syd (2-inches) leveling and 165 lbs/syd (1 ½ -inches) top course.

STANDARDS OF DESIGN – STORM SEWERS

SCOPE

These standards establish the minimum requirements for the design of storm sewers in the Municipality.

PLANS AND SPECIFICATIONS

1. The plans and specifications shall be prepared by a professional engineer licensed in the State of Michigan.

2. Plans shall consist of a cover sheet showing a location map and site plan of the proposed project, plan and profile sheets covering all the proposed street construction, and a standard detail sheet. Plan sheet size shall be 24x36. Plan scale shall be 1 inch = 40 feet horizontally and 1 inch = 4 feet vertically.

3. Elevation shall be based upon U.S.G.S. datum. Elevations based upon assumed datum will not be approved.

4. Plan profiles shall indicate existing and proposed ground levels and stationing.

5. Four (4) sets of plans and specifications shall be submitted by the Developer to the Municipality for preliminary approval. All plans submitted for approval shall be sealed by the licensed engineer in charge of design. Modifications required to meet the Municipal Standards, if any, will be noted on two (2) sets, with one such set returned to the Developer for final corrections with 90 days of receipt.

6. Six (6) sets of final plans shall be submitted by the Developer to the Municipality for approval. All plans and specification submitted for approval shall be sealed by the licensed engineer in charge of design.

7. The Developer will be responsible for securing all State and Local construction permits required for street construction.

8. Three (3) sets of Record blueline prints and 1 set of clean reproducible "record drawings" on seoia paper, and a computer generated 3 ½ - inch floppy disc with the same, having each drawing saved as a separate file shall be submitted to the Municipality upon completion of the construction project. Utility information for as-built projects shall be provided in the following format:

CITY OF DEWITT
AUTOCAD FILE INFORMATION

Version:	AutoCad 14 or 2000
File:	Single file showing all as-built sections
Orientation:	North up
Units:	AutoCad Engineering
Layers:	

Information	Name	Line Type	Color	Text Height
Right-of-Way	ROAD	Continuous	3	
Road Name	ROADNAME	Continuous	2	15' – 0"
Water Main	WM	Hidden	9	
Water Main	WMTEXT	Continuous	4	20' – 0"
Sewer Main	SEWER	Hidden	9	
Sewer Main Text	SWRTEXT	Continuous	4	20' – 0"
River Banks	RIVER	Continuous	5	
Section	SECTION	Center	8	

9. All required easements must be secured and recorded by the Developer. A copy must be filed with the Municipality.

STANDARDS OF DESIGN – STORM SEWERS

1. Location – Shall be located within the street right-of-way as indicated in Chapter 1 of these standards.

2. Minimum and Maximum Velocity – All storm sewers shall be designed to provide a minimum velocity of three feet per second and a maximum velocity of ten feet per second when the pipe is flowing full.

3. Minimum Diameter – The minimum diameter for all storm sewer, including catch basin leads, shall be 12 inches. The Municipality may desire to increase the size of certain sewers and in some instances may pay the difference in costs between what is required to service the development and what the City desires to see constructed.

4. Manhole – Storm sewer manholes shall be constructed at all changes in grade, size, and alignment of the storm sewer. The maximum run between storm sewer manholes shall be 500 feet. Manholes shall be precast. The minimum inside manhole diameter for storm sewers through 21 inches in diameter shall be 48 inches. For storm sewer from 24 to 36 inches in diameter, the minimum storm manhole diameter shall be 60 inches. For storm sewers 42 inches and larger, "tee" manhole riser sections shall be used. Should a change in grade, size or alignment of a pipe occur in a manhole where one or more of the sewers are 42 inches in diameter or larger, the manhole section shall have a minimum inside diameter of the largest pipe diameter plus two feet. All manholes shall be provided with approved manhole steps.

STANDARDS OF DESIGN – SITE GRADING

SCOPE

These standards establish the minimum requirements for the design of site grading.

PLANS AND SPECIFICATIONS

1. The plans and specifications shall be prepared by a professional engineer licensed in the State of Michigan.

2. Plans shall consist of a cover sheet showing a location map and site plan of the proposed project, plan sheet showing the street and lot drainage, a standard detail sheet. Plan sheet size shall be 24x36 or 22x34. Plan scale shall be either 1 inch = 40 feet horizontally and 1 inch = 4 feet vertically.

3. Elevations shall be based upon U.S.G.S. datum. Elevations based upon an assumed datum will not be approved.

4. The site plan for street and lot layout shall indicate both existing and proposed contours at a 2 foot contour interval. Individual lot drainage patterns shall be indicated on the plan.

5. Four (4) sets of plans and specifications shall be submitted by the developer to the Municipality for preliminary approval. All plans and specifications submitted for approval shall be sealed by the licensed engineer in charge of design. Modifications required to meet the Municipal Standards, if any, will be noted on two (2) sets, with one (1) such set returned to the developer for final corrections within 90 days of receipt.

6. Six (6) sets of final plans shall be submitted by the developer to the Municipality for approval. All plans and specification submitted for approval shall be sealed by the licensed engineer in charge of design.

7. The developer will be responsible for securing all State and local construction permits.

Standards of Design – Grading

Site grading shall be designed to allow for drainage of storm water away from residential or commercial buildings. Grades shall be such as to minimize earth settlement problems, avoid concentrating runoff onto adjacent properties, and prevent creation of water pockets or pools of standing water, and to minimize erosion. The grading design shall incorporate natural drainage courses where possible.

In areas where natural drainage is not present, surface (ditches) or subsurface (storm sewers) drainage shall be provided for collection and disposal of storm runoff. It is the intent of these regulations that the grading designs minimize the need for blanks, retaining walls, or terracing.

Minimum grade away from structures shall be 2 percent. On slopes of 3.5 horizontal to 1 vertical or greater, Class A sodding with pegs shall be provided to minimize erosion. The maximum allowable slope shall be 3.5 horizontal to 1 vertical. Site grading shall conform to the applicable sections of the Soil Erosion and Sedimentation Control Act.

TABLE OF STANDARD MATERIALS

STORM SEWER SYSTEM

Storm Manhole Castings	**EJIW**	**1040B**
Catch Basin Castings	**EJIW**	**7045 Curb**
	EJIW	**6517 Ditch**

***Catch basin castings must include language that states:**
"Drains to Waterways / Dump no Waste"

CHAPTER 4

GENERAL CONSTRUCTION

REQUIREMENTS

GENERAL CONSTRUCTION SPECIFICATIONS

1. INSURANCE – The Developer shall furnish a Municipality's Protective Policy for the Municipality affording limits of not less than $1,000,000 per occurrence for personal injury liability property with an aggregate of $2,000,000 or those minimum limits as required by the Municipality, whichever is greater. In addition, the Developer shall provide XCU coverage against loss due to perils of explosion, collapse, and underground hazards. These limits are minimum values, and may be higher depending upon the Municipality.

   a. In the policies to be issued, the named insured shall include the Municipality and the Municipal Engineer. The original policy shall be given to the Municipality with a certificate copy to be given to the Municipal Engineer. The policy shall also provide that it shall not be cancelled unless the Municipality and the Municipal Engineer have been given thirty (30) days advance written notice of cancellation.

   b. The Developer shall not commence work, nor shall he allow any contractor or subcontractor to commence work, under this contract until the above insurance requirement has been compiled with and approved by the Municipality.

2. SAFETY – The Contractor shall comply with, and be responsible for knowledge of, all current, applicable requirements of all Federal and State of Michigan Occupational Health and Safety regulations during construction of the proposed development.

3. ORAL AGREEMENTS – No oral order, objection, claim or notice by any party shall affect or modify any of the requirements of the Municipal Standards or other related ordinances and regulations.

4. SUPERINTENDENCE – The Developer shall give his personal superintendence to the work, or have a competent foreman or superintendent, satisfactory to the Municipal Engineer and the Authority, on the work site at all times.

5. COMPLIANCE WITH LAW – The Developer shall give all notices required by, and comply with, alt applicable laws, ordinances, and codes of the local, State and Federal Governments. All disconnections and demolition shall comply with all applicable ordinances and codes, including all written waivers. Before beginning the work, the Contractor shall examine the Drawings and Technical Specifications for discrepancy to the Municipality. Should the Contractor fail to observe the foregoing provisions and do work at variance with any applicable ordinances or code including any written waivers (notwithstanding the fact that such methods are in compliance with the Technical Specifications), the Contractor shall correct the methods of doing such work without cost to the Municipality.

6. CONSTRUCTION OBSERVATION – The Municipality and its representative shall have access to observe the work wherever it is in preparation or progress at all times. The Developer shall provide proper facilities for access and for observation. Such observation shall not relieve the Developer from any obligation to furnish materials and perform the work strictly in accordance with these specifications.

   The Municipality shall have the right to reject material and workmanship which are defective, or require their correction. Rejected workmanship shall be satisfactorily corrected, and rejected materials shall be removed from the premises without charge to the Municipality. Should it be considered necessary or advisable by the examination of work already completed, by removing or tearing out same, the Developer shall, on request, promptly furnish all necessary facilities, labor, and materials. If the work is found to be defective in any material respect, due to fault of the Developer or his contractors, the Developer shall defray all the expenses of such examination and of satisfactory reconstruction.

   If, however, the work is found to meet the requirements of the Municipality, the actual cost of labor and material necessarily involved in the examination and replacement, plus 15 percent, shall be allowed the Developer. The Developer shall cooperate with the Municipality and furnish such assistance as may be required in order to facilitate inspection and for the purpose of laying out principal reference lines or points. Any work which, during its progress and before its final acceptance, becomes damaged from any cause, the work shall be removed and replaced by good satisfactory work at the Developer's expense.

7. PROTECTION OF WORK – The Contractor shall continuously maintain adequate protection of all his work from damage and shall protect the Municipality's and adjacent property from injury arising in connection with his construction, and shall be responsible for all damage and/or injury caused by or arising out of his operations.

8. USE OF JOB SITE – The Contractor shall confine his equipment, apparatus, the storage of materials and operations of his workmen to limits indicated by law, ordinances, permits or directions of the Municipality and shall not encumber the premises with his materials.

9. PLANS AND SPECIFICATIONS – The Contractor shall keep on the work site a copy of the drawings and specifications.

10. SUNDAY AND NIGHT WORK - The Contractor may prosecute work during the hours of daylight, defined as 7:00 a.m. through 10:00 p.m. No work will be permitted at night, on Sundays, or on holidays unless specifically authorized or directed by the Municipal Engineer or Municipality.

11. SHOP DRAWINGS – After checking and verifying all field measurements, the Developer will submit to the Municipal Engineer, for approval, five copies (or at the engineer's option, one reproducible copy) of all shop drawings, which shall have been checked and approved by the Developer. The Developer shall be responsible for their submission at the proper time so as to prevent delays and delivery of materials. A minimum of 10 work days shall be allowed for checking and processing shop drawings.

The data shown on the shop drawings shall be complete with respect to the dimensions, design criteria, materials of construction, and the like to enable the Municipal Engineer to review the information as required. All details shall show clearly the relations of the various parts to the main members and lines of the structure and where correct fabrication of the work depends upon field measurements, such measurements shall be made and noted on the drawings before being submitted for approval.

All submissions shall be referenced properly to indicate clearly the locations, service, and function of each particular item. At the time of each submission, the Developer will, in writing on such drawings, call the Municipal Engineer's attention to any deviation that the shop drawing may have from the requirements of the contract documents. The Municipal Engineer will check such shop drawings with reasonable promptness, but this checking and approval shall be only for conformance with the design concept of the project and for compliance with the information given in the contract documents. The approval of shop drawings shall not be construed as a complete check but will indicate only that the general method of construction and detailing is satisfactory.

Approval of such drawings will not relieve the Developer of the responsibility for any error, which may exist. The Developer shall be responsible for the dimensions and design of adequate connections and details, and satisfactory construction. The Developer will make any corrections required by the Municipal Engineer and return the required number of corrected copies of shop drawings. The approval of a separate item, as such, will not indicate approval of the assembly in which the item functions.

No work requiring a shop drawing shall be proceeded with until the submission has been approved by the Municipal Engineer. The Municipal Engineer's approval of shop drawings shall not relieve the Developer from his responsibility for any deviation from the Requirements of the contract documents, unless the Developer has, in writing on such drawings, called the Municipal Engineer's attention to such deviation at the time of submission and the Municipal Engineer's has given written approval to the specific deviation, nor shall it relieve the Developer from errors or omissions in the shop drawings.

12. BOUNDARY MARKER REPLACEMENT – The Developer shall have replaced by a Professional Surveyor, at the Developer's own expense, all section corners, property corners or boundary markers of any type or material that may be damaged or destroyed by his operation.

13. HOLD HARMLESS AGREEMENT – "The Developer shall indemnify and save harmless the Municipality, its officers, agents and employees, and all Additional Named Insured's, for and from all claims, demands, payments, suits, actions, recoveries, and judgments of every kind and description brought or recovered against any or all of them for or on account of any injuries to or debt of any person or any other loss or damage to persons or property by reason of the performance of the work of the project, and for any liability or obligation imposed directly or indirectly upon the Municipality or any of the additional named insured's by reason of any law of the State of Michigan or of the United States now existing or which shall hereafter be enacted, imposing any liability or obligation or providing for compensation to any person or persons on account of or arising from the death or injuries to any municipal employee or employee of the Developer, or any of its agents, contractors or subcontractors.

    The Developer shall pay, settle, compromise and procure the discharge of any and all such claims and all such losses, damages, expenses, liabilities, and obligations, and shall defend at his own cost and expense, any and all claims, demands, suits, and actions made or brought against the Municipality, its officers, agents, or employees, and all additional named insured's for or upon any such claim. In case the Developer shall fail, neglect, or refuse to comply with any of the provisions of this paragraph, the Municipality, its officers, agents or employees, or any additional named insured may at its option, but without obligation to do so, in order to protect itself and any additional named insured from liability, defend such claim, demand, suits or action, and pay, settle, compromise, or procure the discharge thereof, in which case the Developer shall repay the Municipality including the attorneys fees paid, suffered or incurred by the Municipality, its officers, agents, or employees, or such additional named insured.

    Nothing in this paragraph shall be construed to apply whenever the damages arising out of bodily injury to persons or damage to property are caused by or result from sole negligence of any promise or indemnity hereunder, its agents or employees.

14. BONDS AND OTHER SURETY GUARANTEES – All bonds, surety guarantees, escrow accounts, etc., shall be in effect for a period of one year after final acceptance of all construction by the Municipality.

CHAPTER 5

TECHNICAL SPECIFICATIONS

TECHNICAL SPECIFICATION INDEX

Land development projects shall be constructed in accordance with the 1990 Standard Specifications for Construction, Michigan Department of Transportation and the following Special Provisions and Supplemental Specifications, as included herein.

SPECIAL PROVISIONS

Special Controls	5-2
Removing Pavement Modified	5-3
Subgrade Undercutting, Special	5-4
Concrete Driveway, Nonreinforced	5-6
Concrete Sidewalk	5-7
Bituminous Application Estimate	5-8
Slope Restoration	5-9
Storm Sewer	5-10
Maintenance Gravel	5-11
Concrete Utility Manholes	5-12
Imported Granular Embankment	5-14

DIVISION 4

SP4.00(B)	Plant Mixed Bituminous Mixtures	5-15

DIVISION 7

SP7.01(A)	Portland Cement Concrete – Concrete Mixtures	5-20

DIVISION 8

SP8.04(A)	Performance Grade Binders	5-22

SUPPLEMENTAL SPECIFICATIONS

5.13(3C)	Utility Trench Backfill	5-23
5.14(J)	Drainage Structures	5-24

SPECIAL PROVISION
FOR
SPECIAL CONTROLS

a. Environmental Protection

It is the responsibility of the contractor to take such measures as may be necessary and to comply with all federal, state, and local laws and regulations for the protection of the public health, safety, welfare, and environment in the performance of the work. The cost of such compliance represents a cost of doing business to be borne by the Contractor.

The following are specific requirements with regard to environmental protection matters:

1. Control of Air Pollution

   A. Dust Control: During the construction of any project, adequate dust control measures shall be maintained by the Contractor so as not to cause detriment to the safety, health, welfare, or comfort of any person or cause damage to any property, residence or business. If not shown as a pay item, dust control will be at the Contractor's expense.

   B. Open Burning: Open burning is prohibited in the City.

2. Control of Water Pollution and Siltation: Construction operations shall be conducted in such a manner as to prevent damaging sedimentation of watercourses, streams, lakes or wetlands and in accordance with the Soil Erosion and Sedimentation Control Permit issued for this Project.

3. Control of Hazardous Materials: All hazardous materials, hazardous waste, toxic materials, or polluting materials shall be used, stored, and disposed of according to applicable federal, state, and local laws and regulations.

4. Noise Pollution: The Contractor shall exercise judgment in the conduct of operations, which by nature result in excessive noise. All such operations shall take place during reasonable daylight periods, which are defined as 7:00 a.m. through 10:00 p.m. unless otherwise stated in the governing municipal ordinance. No work will be permitted at night, on Sundays, or on holidays unless specifically authorized or directed by the City Engineer or the City.

5. Construction Debris: All construction debris shall be removed from the construction site(s) at regular intervals and disposed of at sanitary landfill(s) licensed by the Michigan Department of Environmental Quality.

6. Housekeeping: The project work area shall be maintained in a neat and clean condition and all debris and waste materials shall be removed from work areas on a daily basis.

7. Hauling on Local Roads and Streets: The Contractor is advised that the hauling of construction materials over local roads and streets must be with the approval of the respective County and Municipal authorities having jurisdiction over the proposed hauling routes. All loads shall be within legal limits established by the local governing authorities. The Contractor is responsible for preventing the tracking of material onto local roads and streets. If any material is tracked onto local roads or streets, it shall be removed. It shall be the Contractor's responsibility to make arrangements with local authorities for hauling routes.

SPECIAL PROVISION
FOR
REMOVING PAVEMENT – MODIFIED

CCE 1 OF 1 6/28/00

a. Description The work of Removing Pavement – Modified shall consist of removing existing pavement in accordance with Section 2.07.03 of the 1990 Standard Specifications for Construction of the Michigan Department of Transportation. The existing pavement varies in thickness.

b. Methods of Construction The existing pavement shall be removed to sawed joints at abutting streets as indicated on the plans. Existing utilities shall be protected during removal operations.

SPECIAL PROVISION
FOR
SUBGRADE UNDERCUTTING, SPECIAL

a. Description

This work consists of subgrade undercutting, including backfilling. This work shall be performed to replace material susceptible to frost heaving or differential frost action and unstable soil conditions, as determined by the Engineer. The backfill shall consist of a Structural Geogrid with 12 inches of 21 AA dense graded aggregate. This work shall be performed in accordance with Section 2.08 of the Michigan Department of Transportation 1990 Standard Specifications for Construction, except as modified herein.

1. Definitions

The following defines terms used herein:

Structural Geogrid – A structural Geogrid formed by regular network of integrally connected tensile elements with apertures of sufficient size to allow interlocking with surrounding soil, rock, earth, and function as reinforcement.

2. Reference Documents

Geosynthetic Research Institute

GG1 – 87	Standard Test Method for Geogrid Rib Tensile Strength
GG2 – 87	Standard Test Method for Geogrid Junction Strength

b. Materials

1. Structural Geogrid

Furnish Tensar structural Geogrid reinforcement manufactured by Tensar Earth Technologies, Inc. of Morrow Georgia; or approved equal.

Geogrid Reinforcement shall be BX1100 (Tensar SS1) or BX1120.

2. Backfill

Dense graded aggregate conforming to Michigan Series 21, Class AA specification, MDOT 1990 Standard Specifications for Construction, Section 8.02.

c. Methods of Construction

After the subgrade has been excavated to the approximate grade, the Engineer will promptly inspect the grade to determine if any subgrade undercutting is required and determine the limits of such undercutting.

Subgrade undercutting shall be performed within the limits established by the Engineer, and the excavated material shall become the property of the contractor.

SPECIAL PROVISION
FOR
CONCRETE DRIVEWAY, NONREINFORCED

a. Description

The work of CONCRETE DRIVEWAY, NONREINFORCED shall consist of constructing concrete driveways and drive approaches, of the thickness specified in the plans, in accordance with Section 2.08 and 6.08 of the Michigan Department of Transportation 1990 Standard Specifications for Construction, except as modified herein.

b. Methods of Construction

The work shall consist of placing concrete on a 4" thick compacted MDOT granular material Class II subbase, consolidating the concrete, and providing a broom or burlap finish. Water shall not be added to the concrete surface as an aid in finishing except when approved by the Engineer.

SPECIAL PROVISION
FOR
CONCRETE SIDEWALK

a. Description

This work shall consist of constructing Portland cement concrete sidewalks on prepared base locations as shown on the plans.

b. Materials

Materials shall be as specified in Section 6.11 of the MDOT 1990 Standard Specifications for Construction.

c. Construction Methods

Excavation shall be made to the required depth and width that will permit forming. A 4-inch layer of sand subbase material shall be placed as a base course for the concrete sidewalk. Sand subbase layer shall be included with the concrete sidewalk pay item.

Forming, placing and finishing concrete, joints, curing, and protection of the concrete sidewalk shall be in accordance with Section 6.11 of the MDOT 1990 Standard Specifications for Construction.

SPECIAL PROVISION
FOR
BITUMINOUS APPLICATION ESTIMATE

CCE 1 OF 1 6/26/01

The Bituminous Mixture (Top Course) – 13A shall have a yield of 165 pounds per square yard. Estimated thickness 1-1/2 inches.

The Bituminous Mixture (Leveling Course) – 13A shall have a yield of 220 pounds per square yard. Estimated thickness 2 inches.

The Asphalt Cement for the mixture shall be performance grade 58-28 for bituminous mixes 13A.

The Bituminous Bond Coat material shall be as per the Michigan Department of Transportation 1990 Standard Specifications for Construction.

SPECIAL PROVISION
FOR
STORM SEWER

a. Description

This work shall consist of installing concrete storm sewer pipe and drainage structure lead pipe of the required type and diameter, and shall include excavation and backfilling. This work shall be in accordance with Section 513 of the 1990 MDOT Specifications for construction with the following modifications.

b. Materials

1. Concrete Pipe: Concrete sewer pipe shall be ASTM C76 and shall conform to the class designation shown on the plans or in the proposal. In the absence of class designation, Class III shall be required.

2. Joint Sealer: All concrete pipe joints shall be plain joint tongue and groove and shall be wrapped with a non-woven geofabric.

3. Concrete Lead Encasement: Grade P2 or S3

4. Storm Lead: Unless otherwise shown on drawings, all storm lead shall be 6 inch SDR 35 PVC pipe conforming to requirements of ASTM D3034. Connect to mainline storm sewer with Kor-N-Tee flexible connector manufactured by NPC.

5. Non-woven Geofabric: Used in wrapping storm joints shall weigh at least 3.0 ounces per square yard and be a minimum of 3 feet in width.

c. Methods of Construction

Construction shall conform to MDOT Section 513 with the following modifications:

1. Connecting to Existing Pipe – When the joint of the pipe connecting to existing sewer or drainage structure lead does not match the existing pipe, the connecting joint shall be constructed in accordance with the MDOT Section 511 requirements for extending concrete culverts.

2. Backfilling: Backfill for sewers shall be Granular Material Class III or with on-site granular material approved by the engineer.

3. Surplus Earth Removal: Disposal of excavated materials shall be the responsibility of the Contractor. The Engineer reserves the right to require that all or any part of the excavated material be hauled to such locations as may be designated. Such designated locations will not be more than 1 mile from the excavation site.

4. Concrete Lead Encasement: Concrete encasement for drainage structure leads shall be installed at various locations as directed by the Engineer. When required, encasement shall be installed as indicated on the Special Details sheet of the plans.

5. Storm Sewer Lead: Core a hole in pipe consistent with Kor-N-Tee connector and storm service lateral diameter. Insert Kor-N-Tee assembly into pipe and expand into place. Insert service lateral into Kor-N-Tee until it "bottoms" into a positive stop in Kor-N-Tee. Tighten pipe clamp around service lateral to 60 inch pounds.

SPECIAL PROVISION
FOR
MAINTENANCE GRAVEL (LM)

a. Description. – This work consists of constructing an aggregate surface on a prepared grade, where directed by the Engineer, to maintain traffic during construction. Removal and disposal of the aggregate when no longer needed, is also included in this item of work. This work will be in accordance with Section 308 of the 1990 Standard Specifications for Construction except as modified by this special provision.

b. Materials – Maintenance gravel will be dense graded aggregate Class 22A or 23A. When approved by the Engineer, salvaged aggregate or bituminous material may be used in place of Class 22A or 23A. Salvaged material must come from this project and must be 2-inch, or less, in diameter.

c. Construction – Maintenance gravel is to be placed at locations shown on the plans or indicated by the Engineer, to provide a flush transition to shoulders, driveways and other areas where traffic is to be maintained.

The aggregate surface shall be maintained in a smooth and firm condition until no longer needed for maintaining traffic. When construction operations progress to the point that the maintenance gravel is no longer needed, removal of maintenance gravel is to occur in the same workday as paving or aggregate surfacing of the removal area.

Maintenance gravel may be incorporated into the construction of aggregate base, shoulders or approaches at the direction of the Engineer. Otherwise, the Contractor is responsible for removal and disposal of the material in accordance with the 1990 Standard Specifications for Construction.

SPECIAL PROVISION
FOR
CONCRETE UTILITY MANHOLES

a. Scope – The work covered by this section of the specifications consists in furnishing all plant, labor, equipment, and materials in connection with concrete utility manholes.

b. General

1. Requirements – All concrete utility manholes, including valve vaults, shall be installed in accordance with the details indicated on the drawings and these specifications.

2. Specifications by Reference – Whenever reference is made to specifications other than those contained within this document, said specifications shall apply and be binding as if fully repeated herein. If a specification publication date is not listed herein, it shall be taken to be the most recent published edition.

3. Material Lists – The contractor shall submit detailed material lists to the Municipal Engineer for approval of all materials furnished under this specification.

c. Materials

1. Precast Sections:

   a. **Integral Base –** Manholes shall consist of integral cast base and riser sections conforming to ASTM C478.

   b. **Pipe Connections –** Pipes shall generally be flush with the interior manhole wall, but protruding no more than 2 inches. Manhole section joints shall be of the O-ring rubber joint type. All pipe openings shall be cast in the precast section or cored in the finished wall. Broken and patched connections will not be accepted.

2. Manhole Adjusting Rings – Shall be standard precast reinforced concrete rings with a maximum of 6 inch height for new construction and 12 inch height for the retrofit of existing structures. For all new projects, the manhole castings will be set at the road base surface, with the final adjustment to be made at the time of construction of the final course of bituminous surfacing.

3. Manhole Steps- Shall be Co-Polymer Polypropylene Plastic manhole steps reinforced with 3/8 inches deformed reinforced bar. Manhole steps shall be of the press-fit type with serrated type tread and lugs. Steps shall not be cast in wall. Steps shall be spaced at 16 inches on center in a true vertical alignment unless shown otherwise on the drawings.

4. Cast Iron Frames And Covers – Shall conform to the castings noted on the Table of Standard Materials.

5. Mortar and Grout – At the discretion of the City, the mortar and grout may be required to be hydrogen sulfide resistant.

6. Concrete – Concrete shall meet the requirements of MDOT Special Provision Portland Cement Concrete-Concrete Mixtures.

d. Installation

Utility manholes shall be constructed of precast concrete sections including risers, grand rings, and precast tops of eccentric cone, or flat slab indicated below.

1. Utility Manhole – Precast bases shall be set on uniform bedding of 8 inches of compacted sand or existing granular material. When water is encountered in the trench, bases shall be set on a minimum of 12 inches of stone fill meeting MDOT 6A.

2. Precast Concrete Risers – Shall be set plumb and where manhole steps are provided, the risers shall be aligned to form a continuous ladder. Joints between manhole sections shall utilize rubber O-rings. Top sections shall be eccentric unless otherwise indicated on the drawings.

3. Castings – Shall be installed as specified below:

    a. Storm Sewer Manholes and Catch Basins – Castings shall be set on precast concrete adjusting rings with a minimum of adjustment of 4 inches and a maximum of 12 inches. Casting and rings shall be set in mortar.

    b. Casting Elevations – Where castings are to be flush with permanent pavements, the contractor shall adjust the frame to the proper grade. Where castings are on flat slab tops in non-paved areas, they shall extend approximately 1 inch above finish earth grade unless shown otherwise.

    c. Inside Finish – The inside surface of adjustment rings or bricks shall be tooled to give a smooth finish coat of mortar.

4. Flow Channels – Shall be constructed in manhole bottoms with mechanically mixed Class A concrete. Prior to placement of concrete, a bonding compound, Sealtight INTRALOK, Sika SIKABOND, ACRYL 60, or equal, herein shall be applied per manufacturers' recommendations to the manhole base. Flow channel depth shall not exceed ½ the pipe diameter and concrete thickness shall be a minimum of 4 inches measured from the top of the base to the bottom of the flow channel. A minimum 0.1 foot drop between inlet and outlet pipe invert elevations shall be provided. Where the grade of sewer is continuous through the manhole, the contractor may lay the pipe through the manhole, fill around the pipe with concrete, and carefully break out or cut out the top of the sewer pipe.

SPECIAL PROVISION
FOR
IMPORTED GRANULAR EMBANKMENT

CCE 1 OF 1 4/12/99

a. Description

This work shall consist of Importing Granular Material for Embankment construction. This work shall be performed to construct the site grading to the proposed line and grades, in the event sufficient materials is not available on site.

b. Materials

Shall conform to MDOT Granular Material Class III.

c. Methods of Construction

Construction of embankment shall be performed in accordance with section 208.10 of the Michigan Department of Transportation 1990 Standard Specifications for construction except as modified herein.

1. Material shall be placed and compacted in accordance with the controlled density method.

2. Importing of Granular Material for Embankment construction shall be approved in writing by the Engineer prior to transporting of material to the site.

MICHIGAN
DEPARTMENT OF TRANSPORTATION
BUREAU OF HIGHWAYS

SPECIAL PROVISION
FOR
PLANT MIXED BITUMINOUS MIXTURES

01-30-96

BAC/CD:edw 1 OF 5 APPR:JTL:PAL 02-08-96

This specification revises the requirements for bituminous mixtures, replacing portions of the 1990 Standard Specifications as follows:

The paragraph beginning, "For bituminous base or leveling..." Subsection 4.00.19 (tenth paragraph on page 152) of the 1990 Standard Specifications is hereby deleted.

Delete the 20 and 36 series Pay Items and Pay Units and add the following to Subsection 4.00.19 (pages 150 and 151) of the 1990 Standard Specifications:

Pay Item	Pay Unit
Bituminous Mixture – 2C	Ton
Bituminous Mixture – 3C	Ton
Bituminous Mixture – 4C	Ton
Bituminous Mixture – 2B	Ton
Bituminous Mixture – 3B	Ton
Bituminous Mixture – 4B	Ton
Bituminous Mixture – 13A	Ton
Bituminous Mixture – 11A	Ton
Bituminous Mixture – 13.	Ton
Bituminous Mixture – 36A	Ton

Delete note (a) for Table 4.00-3 in Subsection 4.00.19(a) (page 153) of 1990 Standard Specifications.

In Subsection 7.10.02 of 1990 Standard Specifications, delete the aggregate series 20AAA, 20AA, 20A, 20B, 20C. Add the following paragraph to Subsection 7.10.02:

Aggregates for use in Mixtures 2C, 3C, 4C, 2B, 3B, 4B, 13A, 11A, and 13 shall conform to the applicable requirements of Section 8.02 or Supplemental Specifications, except that the grading shall be such that when blended, the grading will conform to that specified for the mixture.

Subsection 7.10.05(c) and (d) of 1990 Standard Specifications is hereby deleted and replaced with the following:

C. Recycled Mixtures.-

1. **Description.-** The Contractor may substitute Reclaimed Asphalt Pavement (RAP) for a portion of the new materials required to produce bituminous mixture for this project. The mixture shall be produced in accordance with Section 7.10 of the 1990 Standard Specifications or as modified herein.

2. **Stockpile Requirements.-** RAP stockpiles shall be completely established at the plant site prior to submission of mix design samples, except those projects where the RAP is being removed during the project from an existing MDOT roadway and core test data is available.

   There shall be sufficient RAP in the stockpile to meet the material requirements of each mixture that a recycled mix design is approved for per project or the Contractor will provide a mixture with all virgin materials at the same unit price. RAP for bituminous mixtures shall be processed to a size compatible for the mixture specified. An Aggregate Wear Index (AWI) value of 240 will be assigned all RAP, unless documented evidence is presented by the Contractor of a different value. The contractor shall provide Quality Control testing of the RAP during the processing and stockpiling operation in accordance with the following schedule:

   a. One complete mixture analysis for every 1,000 tons of RAP (minimum of 3).

   b. One penetration test on the recovered asphalt cement for every 3,000 tons of RAP (minimum of 2).

   Documented evidence of testing and accumulated tonnage in the stockpile (tonnage may be estimated) must be provided to the Laboratory before a mix design will be processed.

3. **Uniformity.-** The processed RAP shall meet the uniformity standards as follows:

Parameter	Allowable Standard Deviation
% of Asphalt in RAP	0.50
Recovered Penetration of Asphalt Cement in RAP, dmm.	15.00

4. **Mix Design.-** The Contractor shall submit materials for Recycled Mixture Designs in accordance with the 1990 Procedures for Bituminous Mixture Design Submissions.

5. **Recycle Ratio.-** The recycle ratio will be established based on the Contractor provided test data.

   Replace Table 7.10-1, 2, & 3 and respective sets of footnotes in the 1990 Standard Specifications with the following:

Table 7.10-1 Mix Design Criteria

Mixture No.	2		3		4		13A	13	11A	36A
Mixture Type	C	B	C	B	C	B				
VMA MIN %	13.5	13.5	15.0	15.0	16.0	16.0	15.5	15.5	13.5	16.5
Air voids % Target (1)	3.0	3.0	3.5	3.5	3.5	3.5	3.0	3.0	3.0	3.0
Fines/A.C. Ratio Max. (2)	1.2	1.2	1.2	1.2	1.2	1.2	1.2	1.2	1.2	1.2
Fine Agg. Angularity Min.(3)	4.0	3.0	4.0	3.0	4.0	3.0	2.5	2.0	2.5	3.0
Flow 0.01 in.	8-16	8-16	8-16	8-16	8-16	8-16	8-16	8-16	8-16	8-16
L.A. Abrasion Max% (4)	40	40	40	40	40	40	40	40	40	40
Soft Particle Max.% (5)	12.0	12.0	12.0	12.0	12.0	8.0	8.0	8.0	12.0	8.0
Stability Min	1200						900			

(1) This target may be adjusted in the field to meet project design criteria for a specific application such as 2.0 percent air voids on shoulders or bike paths.

(2) FINES/ASPHALT RATIO: The ratio of aggregate material finer than No. 200 sieve to asphalt cement content by weight, including fines and asphalt contributed by RAP.

(3) As determined in accordance with MTM 118. If the Fine Aggregate Angularity of each individual aggregate does not meet the minimum, then the test of the blended aggregate must meet the requirements. In mixtures containing RAP, the required minimum Fine Aggregate Angularity must be met by the virgin material.

(4) Los Angeles Abrasion Maximum loss in % must be met for the composite mixture; however, each individual aggregate must be less then 50.

(5) The sum of the shale, siltstone, structurally weak and clay-ironstone particles shall not exceed 8 percent for aggregates used in top course. The sum of the shale, siltstone, structurally weak and clay-ironstone shall not exceed 12 percent for base and leveling courses.

Table 7.10-2 Composition of Bituminous Mixtures

Mixture No. Mixture Type	2C	2B	3C	3B	4C	4B	13A	13	11A	36A
Asphalt %	4.0 6.0	4.0-6.0	4.5-7.0	4.5-7.0	5.0-8.0	5.0-8.0	5.0-8.0	5.0-8.0	4.0-6.0	5.5-8.0
PERCENT PASSING INDICATED SIEVE										
1½ inch	100	100							100	
1 inch	99-100	99-100	100	100					90-100	
¾ inch	90 max.	90 max.	99-100	99-100	100	100	100	100	70-95	
½ inch	78 max.	78 max.	90 max.	90 max.	99-100	99-100	75-95	75-95	55-85	100
3/8 inch	70 max.	70 max.	77 max.	77 max.	90 max.	90 max.	60-90	60-90	40-80	92-100
No. 4	52 max.	52 max.	57 max.	57 max.	67 max.	67 max.	45-80	45-80	25-65	65-90
No. 8	15-40	15-40	15-45	15-45	15-52	15-52	30-65	30-65	15-20	55-75
No. 16	30 max.	30 max.	33 max.	33 max.	37 max.	37 max.	20-50	20-50	10-40	
No. 30	22 max.	22 max.	25 max.	25 max.	27 max.	27 max.	15-40	15-40	7-32	25-45
No. 50	17 max.	17 max.	19 max.	19 max.	20 max.	20 max.	10-25	10-25	5-20	
No. 100	15 max.	15 max.	15 max.	15 max.	15 max.	15 max.	5-15	5-15	4-12	
No. 200	3-6	3-6	3-6	3-6	3-6	3-6	3-6	3-6	3-6	3-10
Crushed Min. % (MTM 117)	90	50	90	50	90	50	25	0	25	60

NOTE: 13A, 11A, 36A mixture graduations must satisfy the following sand ratio: No more than 50% of the material passing the No. 4 sieve is allowed to pass the No. 30 sieve.

Tables 7.10-1 and 2 are for mix design only. Field application of the Job-Mix-Formula (JMF) will not be allowed outside the limits shown.

Table 7.10-3 Uniformity Tolerance Limits for Bituminous Mixtures

Tests	Asphalt Cement Content	Percentage Passing Sieves								
		1.0	¾	½	3/8	No.4	No.8	No.30	No. 200	Crush
Range 1	±0.30	±7.0	±6.0	±5.0	±5.0	±4.0	±4.0	±3.0	±1.0	±10
Range 2	±0.40	±9.0	±8.0	±7.0	±6.0	±5.0	±5.0	±4.0	±2.0	±15

MICHIGAN
DEPARTMENT OF TRANSPORTATION
BUREAU OF HIGHWAYS

SPECIAL PROVISION
FOR
PORTLAND CEMENT CONCRETE – CONCRETE MIXTURES

M&T:RHV 1 of 2 07/31/91

Portland cement concrete shall meet the requirements of Section 7.01 except as modified herein:

1. In 7.01.04-a, the first three sentences are deleted and replaced with the following:

Concrete mixture proportions will be determined by the Engineer to meet the requirements in Table 7.01-1 for the option selected by the Contractor, based on the materials selected by the Contractor. These proportions should provide strengths well in excess of those indicated in Table 7.01-1. However, some unusual combinations of materials, inadequate batching controls, or other deficiencies over which the Contractor has control may provide strengths of concrete lower than indicated in Table 7.01-1. In such instances, the Contractor shall take such action as necessary to provide concrete having strength equal to or exceeding the strengths indicated in Table 7.01-1.

Concrete mixture proportions furnished by the Engineer, or alternate mixture proportions furnished by the Contractor, will give the amounts of cement, fine and coarse aggregate, and the approximate amount of water required per cubic yard of concrete. Contractor modifications to the Engineer's mixture proportions are restricted to increased cement content, increased coarse aggregate content, or decreased water content, at no cost to the Department. Use of admixtures shall be as required or permitted herein.

2. Footnote (g), to Table 7.01-1 Concrete Mixtures, is deleted and replaced by the following: The flexural and compressive strengths are the minimum strengths anticipated for the mix proportions indicated for the various grades of concrete when made and cured under standard conditions. The 28-day flexural or compressive strength will be used for final acceptance. If both flexural and compressive strength is used to determine the strength, compressive strength at 28 days shall govern in case of conflict. It will be the Contractor's responsibility to modify the mix design, at no cost to the Department, if the Contractor's choice of materials does not achieve the flexural or compressive strengths indicated.

3. Replace 7.01.04-e, with the following (except subparagraphs 2 and 3 remain unchanged):

e. Strength of Concrete.- Concrete test specimens will be made at frequent intervals from the concrete being incorporated in the work. Concrete for test specimens and labor for testing equipment for specimens will be furnished by the Department.

Test specimens will be made according to Department procedures which are based on the Method of Making and Curing Concrete Test Specimens in the Field, AASHTO T 23. Test specimens for determining conformance to the strengths shown in Table 7.01-1 shall be cured according to Section9.2 of T 23, curing specimens as basis of acceptance using standard curing, or Section 9.3 of T 23, curing specimens as basis of acceptance at remote sites using modified standard curing. Test specimens for determining strength of concrete for opening to traffic, for removing shoring or forms, or similar purposes shall be cured as described below.

Flexural strength will be determined according to Department procedures which are based on a modification of Test Method for Flexural Strength of Concrete (Using Simple Beam with Center-Point Loading), ASTM C 293. Compressive strength of cylinders will be determined according to ASTM C 39. If compressive strength is determined on beam ends according to ASTM C 116, the strength as determined by that method will be reduced by 20 percent to provide results comparable to results which would be obtained on a cylinder having a height-to-diameter ratio of two.

Results from test specimens cured using standard curing or modified standard curing, as described above, will be reviewed for conformance to the 28-day strengths indicated in Table 7.01-1, the contract unit price may be adjusted or the Contractor may be required to remove and replace the concrete deficient in strength at no cost to the Department.

Concrete containing ground blast-furnace slag or fly ash may gain strength at a slower rate during early stages (prior to 28 days) than if only portland cement was used. The Contractor shall adjust operations as necessary for staging activities.

The strength of pavement or structure concrete for opening to construction traffic or regular traffic, for removing shoring and forms, or for other similar purposes will be determined by one or more of the following methods, as deemed appropriate by the Engineer.

1. Test Beams or Cylinders.- A series of test beams or cylinders, may be made and cured under environmental conditions similar to the pavement or structure. By testing the specimens at intervals, it can be determined when the concrete has adequate strength for the intended purpose.

[No change in subparagraphs 2 and 3.]

MICHIGAN
DEPARTMENT OF TRANSPORTATION
BUREAU OF HIGHWAYS

SPECIAL PROVISION FOR PERFORMANCE GRADE BINDERS

C&T: JWB 1 of 1 07-23-97
C:APPR:EDW:JTL:07-23-97

a. Description.- The work shall be according to the 1990 Standard Specifications for Construction, except as modified below.

b. Materials.- 8.04-1 Penetration-Graded and Viscosity-Graded Asphalt Cements of the Michigan 1990 Standard Specifications for Construction is replaced by Table 1 Performance Graded Asphalt Binder Specification of ASTM D-4 Proposal P248.

Any references to 85-100 penetration grade, 120-150 penetration grade, AC-10 viscosity grade, or AC-5 viscosity grade in the scope of the work, will be replaced by PG 58-28 binder.

Any reference to 200-250 penetration grade or AC-2.5 viscosity grade in the scope of the work will be replaced by PG 52-28 binder.

MICHIGAN
DEPARTMENT OF TRANSPORTATION
BUREAU OF HIGHWAYS

SUPPLEMENTAL SPECIFICATION FOR UTILITY TRENCH BACKFILL

5.13(3c) **1 of 1** **10-10-90**
FHWA Approval 04-25-91

a. Description.- This work shall consist of backfilling trenches where called for on the plans with a porous bedding material in accordance with the typical trench sections shown on Standard Plan IV-83 Series.

b. Material.- The porous bedding materials for backfilling sewer trenches shall be Granular Material Class IIIA and shall meet the requirements specified in Subsection 8.02.06 of the 1990 Standard Specifications with the following additions:

The following material is hereby added to the Table 8.02-3:

MATERIALS	SIEVE ANALYSIS (ASTM c 136) TOTAL PERCENT PASSING (a)									Loss by Washing (a)
	6"	3"	2"	1"	½"	3/8"	No. 4	No.30	No. 100	
CLASS IIIA	150mm	75mm	50mm	25mm	12.5mm	9.5mm	4.75mm	0.60mm	0.150mm	Percent
						100			0-30	0-15

(a) Based on dry weights.

The following sentence is hereby added at the end of the first paragraph:

Granular Material Class IIIA for use as trench backfill may also consist of crushed concrete.

c. Construction Methods.- Trenches shall be backfilled and compacted in accordance with the methods specified under Backfilling, Subsection 5.13.08, of the 1990 Standard Specifications, except the third paragraph is hereby deleted and is replaced with the following paragraph:

Backfill for sewers within the limits of the roadbed as shown on the plans or as directed by the Engineer shall be Granular Material as shown on the plans and shall be compacted to 95 percent of Maximum Unit Weight.

MICHIGAN
DEPARTMENT OF TRANSPORTATION
BUREAU OF HIGHWAYS
SUPPLEMENTAL SPECIFICATION
FOR
DRAINAGE STRUCTURES

a. Description.- This work shall consist of adjusting, constructing, or lowering drainage structures of portland cement concrete (with or without steel reinforcement as provided), portland cement concrete block masonry, or brick masonry; furnishing and placing metal covers; and shall include excavation and backfilling. The work for temporary lowering shall include identifying, salvaging, and storing the existing structure castings; covering the exposed masonry with a steel plate; and filling the hole with bituminous (compacted) to the elevation of the existing pavement.

The term drainage structure, as used herein, refers to manholes, catch basins, leaching basins, inlets, and drop inlets. The type of drainage structure required is designated in one of three ways:

1. Drainage Structure.- This pay item consists of a concrete footing, or precast sump, and drainage structure. This type is specified for accessing sewers having diameters of 42 inches or smaller.

2. Precast Manhole Tee and Manhole Riser.- These pay items are generally used to access new sewers having diameters of 42 inches or larger.

3. Manhole Base, Type 1 or 2 and Manhole Riser.- These pay items are generally used to access existing or new sewers having diameters of 48 inches and larger. Manhole Base Type 1 may be used in place of a Precast Manhole Tee.

Cover as used herein refers to the metal frame and lid or grate of the details shown on the plans. Covers are paid for separately.

b. Materials.- The materials shall meet the requirements specified in the Section designated, as follows:

Concrete Grade 30M	7.01
Mortar Type R-2	7.02
Granular Material Class III	8.02
Steel Reinforcement	8.05
Miscellaneous Metals	8.07
Castings	8.07
Culvert, Sewer Pipe, and Box Sections	8.08
Masonry Units	8.14

The steel plate for temporary lowering of a drainage structure, as approved by the Engineer, shall be of sufficient size to cover the entire circumference of the drainage structure and be able to support vehicle wheel loads. The bituminous material will be the plan leveling course.

c. Construction Methods.

1. Constructing, Adjusting, and Temporary Lowering of Drainage Structures, Precast Manhole Tees, Manhole Bases, and Manhole Risers:

a) Excavation.-Excavation shall be as specified under Subsection 2.09.03.

b) Concrete Construction.- Concrete construction shall be as specified under Section 5.03. Casting of concrete during hot weather shall be limited by the temperature of the concrete at the time of placing. Concrete shall not be cast when the temperature of the concrete is above 90 F.

Manholes for sanitary sewers shall be of cast-in-place or precast construction.

c) Placing Brick and Block Masonry.- Masonry with mortar shall not be placed in freezing weather and any work which is damaged by frost shall be removed and replaced.

A plaster coat of mortar ½ inch in thickness shall be applied to the outer surface of the structure and to the inner surface below the outlet flow line of all catch basins with traps.

1) Brick.-Before being laid all brick shall be thoroughly wetted and the surface allowed to dry only sufficiently to prevent slipping on the mortar. Broken or chipped brick shall not be used on the faces of the structure. The brick shall be laid in courses with full and close mortar joints. The courses shall be level throughout except where otherwise required. Adjoining courses shall break joints by half the length of a brick, as nearly as practicable, an at least once course in every 7 shall be composed of headers. The length of pieces of brick used for making closures shall not be less than the width of a whole brick and, wherever practicable, closures shall be made with whole brick as headers.

Joints shall not be more than ½ inch in thickness unless otherwise provided, and shall be struck and properly pointed and the exposed surfaces shall be true and smooth. Where plaster coat is required the joints shall be raked.

Before applying a plaster coat of mortar to a brick surface, the brick shall be thoroughly wetted with water and the surface allowed to dry sufficiently to provide for proper bonding of plaster coat.

2) Concrete Block.- The first course of blocks, as placed on the concrete footing, shall be on a full bed of mortar.

All blocks shall be laid in courses with full and close mortar joints. The courses shall be level throughout except where otherwise necessary. Adjoining courses shall break joints by half the length of the block as nearly as practicable.

The joints shall be of a uniform thickness throughout the structure. All joints shall be struck and properly pointed and the exposed surfaces shall be true and smooth.

d) Precast Reinforced Concrete Units.- Precast reinforced concrete units shall be constructed in accordance with the details shown on the plans. The joints shall be sealed with mortar in accordance with the requirements specified for Culverts, under Subsection 5.11.05. Precast units shall be constructed on poured-in-place or precast concrete footings. Precast footings shall be supported by a compacted 6-inch granular subbase.

e) Steel Reinforcement.- Steel reinforcement shall be installed as specified under Subsection 5.03.07.

f) Placing Castings.- Castings shall be set to the required elevation in full mortar beds or otherwise secured as shown on the plans.

g) Inlet and Outlet Pipes.- Pipe or tile placed in the masonry for inlet or outlet connections shall extend through the walls and beyond the outside surface of the walls a sufficient distance to allow for connections, and the masonry shall be carefully constructed around them and sealed with mortar to prevent leakage. When required, traps shall be installed according to details shown on the plans. Inlet and outlet pipes for sanitary sewer connections shall meet requirements of ASTM C 923.

h) Backfilling.- The method of backfilling shall be as specified under Subsection 5.13.08.

i) Temporary Lowering of Drainage Structure.- This work shall take place prior to any milling and be separate from any adjusting of the structure as identified in the plans. The Engineer will determine those structures where the item will apply. The Contractor will make any ties needed to later establish the location of the structure. Final adjustment will take place just prior to placing the bituminous top course. Drainage structure covers and frames removed while adjusting the drainage structure shall be match marked by the Contractor to ensure that the original cover is used with its original frame. The frames and covers shall then be salvaged and safely stored for future replacement. Any needed repairs shall be made to the steel plate to make uniform contact with the top of the structure. The bituminous mixture shall be placed and compacted in uniform layers as directed by the Engineer.

2. Drainage Structure Covers.- Where required, new covers including frames and grates or lids conforming to details on the plans shall be furnished and placed on new or existing structures in full mortar beds and set to the required elevation.

3. Adjusting Drainage Structure Covers, Monument Boxes, and Water Shutoffs.- Final adjustments of drainage structures, monument boxes, and water shutoffs on bituminous projects shall be made after the surface is ready for the top course and prior to placing the top course.

Adjusting covers shall apply where the elevation of the cover is not changed more than 6 inches and no other alterations are necessary. Where called for on the plans, or authorized by the Engineer, existing covers shall be adjusted to the proper elevation by removing the castings and setting them to the required elevation by supporting them on a concrete collar or on masonry in a full mortar bed, and constructed such that they will be held firmly in place. The adjacent pavements, curb, or curb and gutter shall be replaced to the original elevation, condition and kind of construction, unless otherwise provided.

4. Additional Depth of Adjusting Drainage Structures.- Where called for on the plans or directed by the Engineer, existing manholes, catch basins, leaching basins, or inlets shall be adjusted to the required line and elevation and to conform essentially to the details shown on the plans.

Where adjustment to top of footing is necessary, the work will be classified as a new structure of the detail and depth required.

5. Cleanout.- All catch basins, manholes, leaching basins and inlets installed on the project shall be maintained and shall be reasonably free of accumulations of silt, debris, and other foreign matter at the time of final acceptance.

APPENDIX A

STANDARD DETAILS

APPENDIX A

STANDARD DETAILS

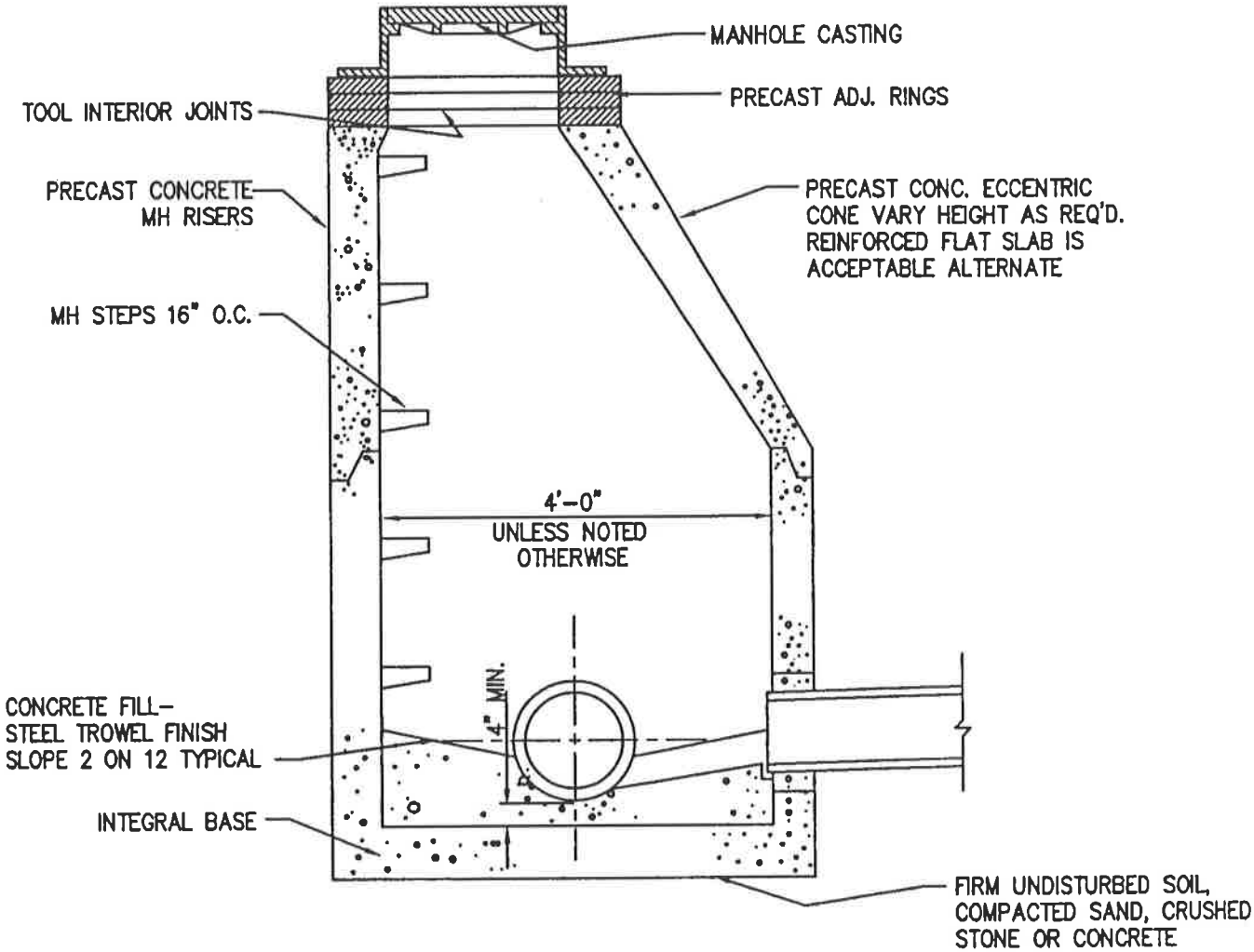

STANDARD STORM MANHOLE

NO SCALE

S:\2001\ \Details 1-6.dwg - StdStm A1

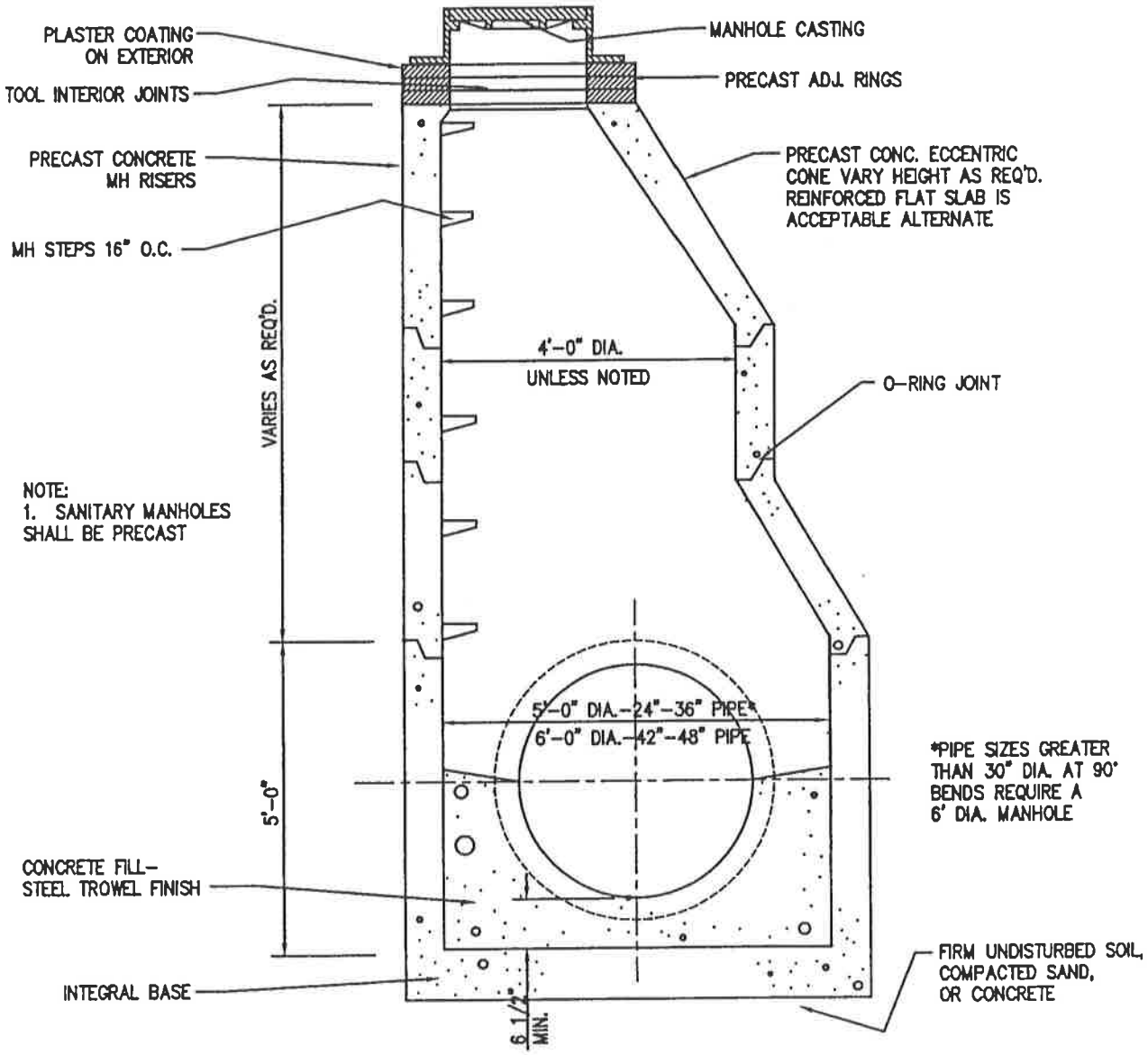

STANDARD MANHOLE - 24" TO 48" PIPE

NO SCALE

Aug/23/ S:\2001\ \Details 1-6.dwg - StdMH A2

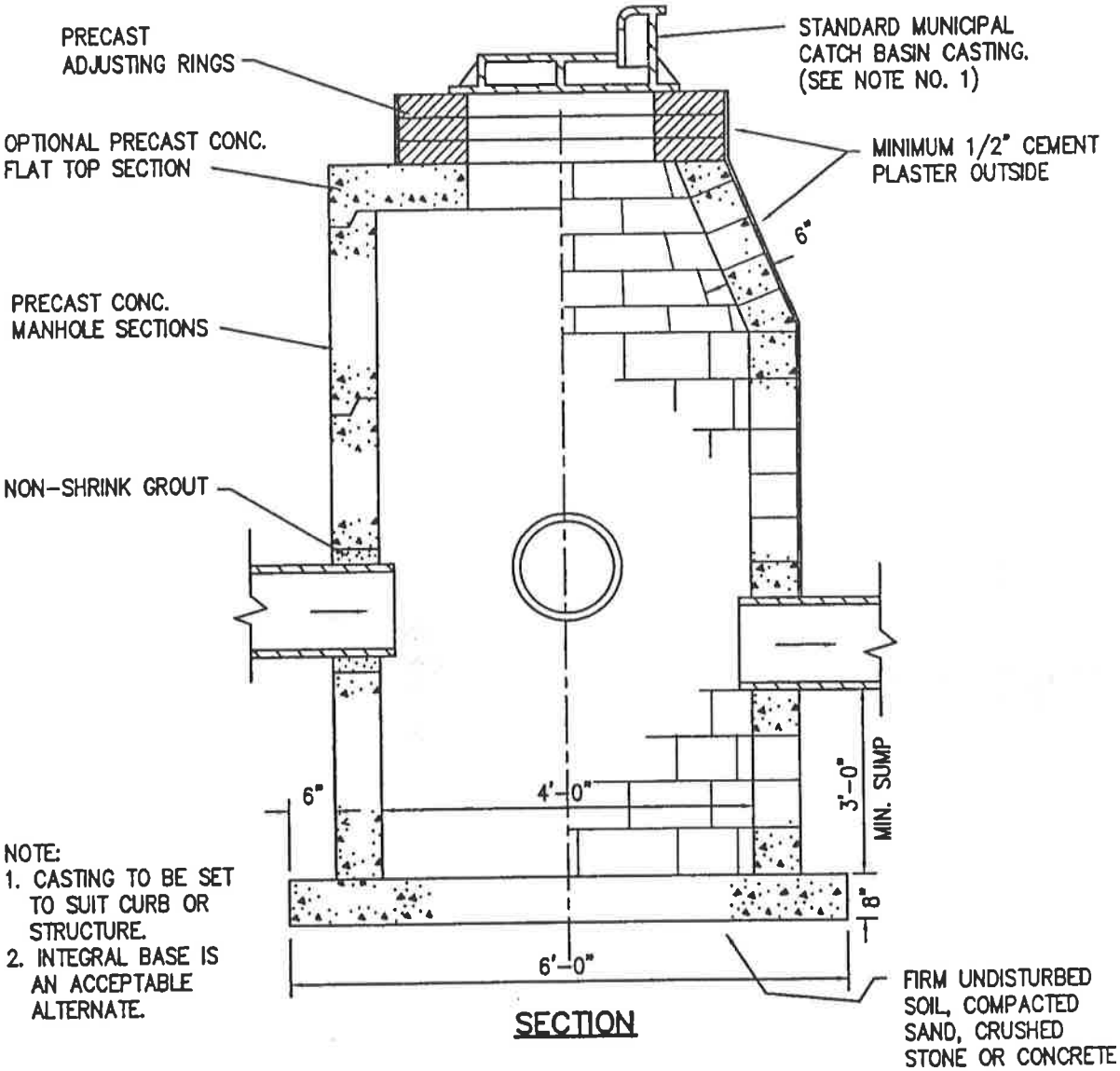

NOTE:
1. CASTING TO BE SET TO SUIT CURB OR STRUCTURE.
2. INTEGRAL BASE IS AN ACCEPTABLE ALTERNATE.

STANDARD CATCH BASIN

NO SCALE

Sep/18 '1 - 9:07am, rmurphy
S:\20(179\Details 1-5.dwg - StdCB A3

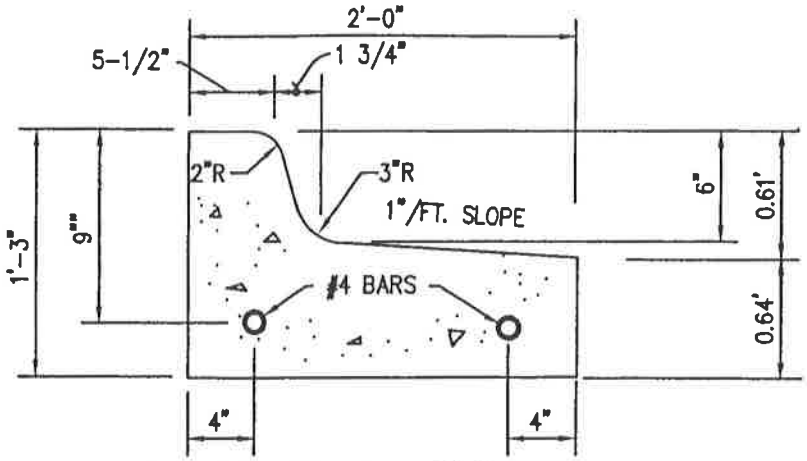

DETAIL F-4 MODIFIED

(WASHOUT CURB & GUTTER)

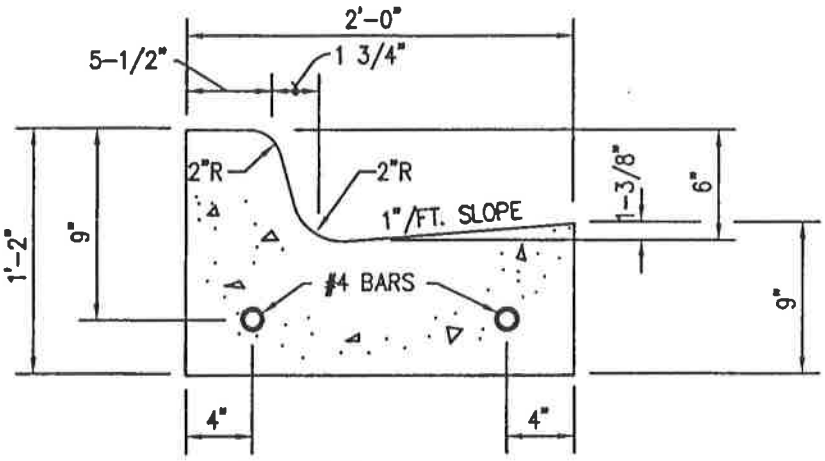

DETAIL F-4

NO SCALE

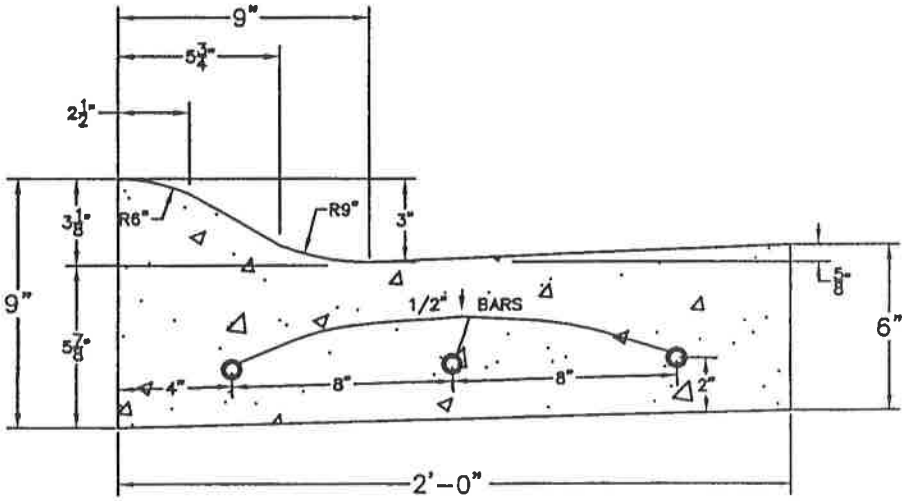

STANDARD ROLL CURB & GUTTER

NO SCALE

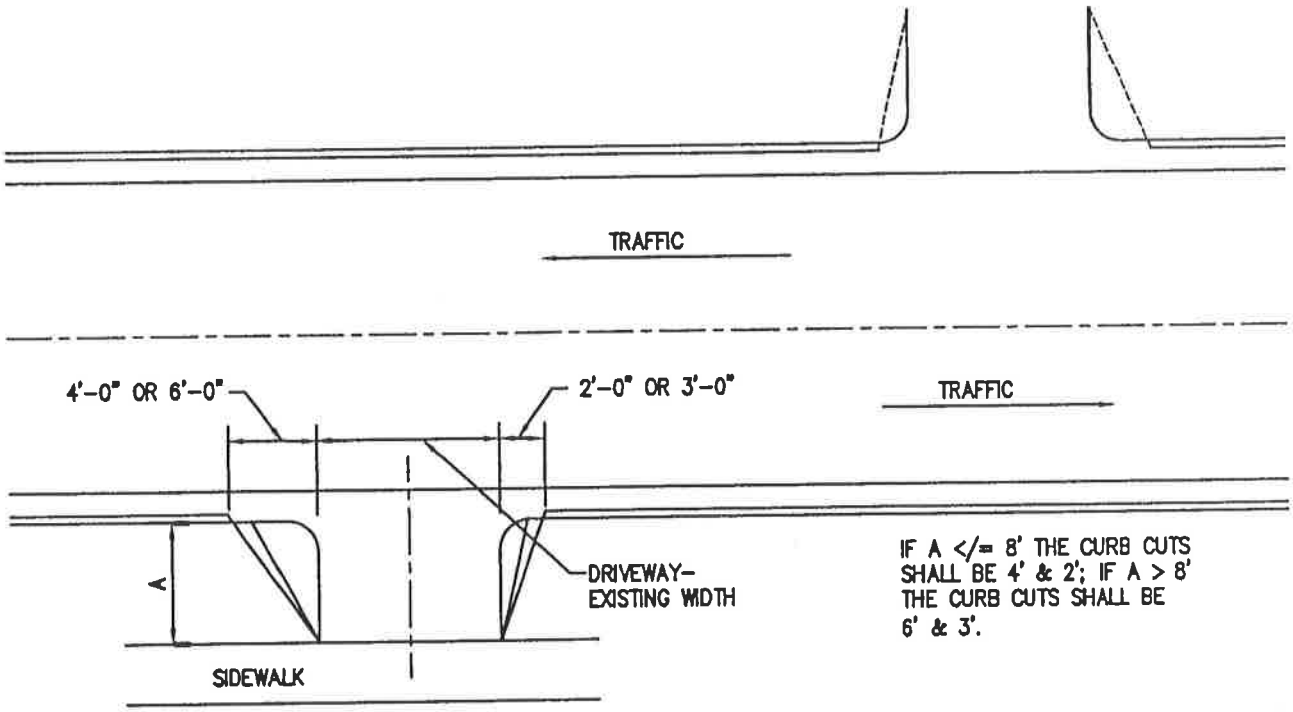

TYPICAL CURB BREAKS

NO SCALE

S:\2001 3\Details 1-5.dwg - StdCbrk A5

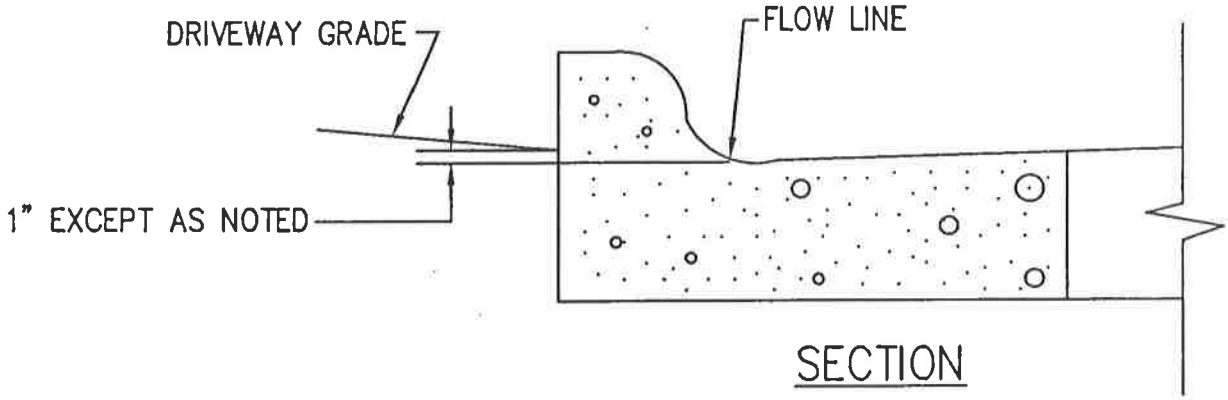

SECTION

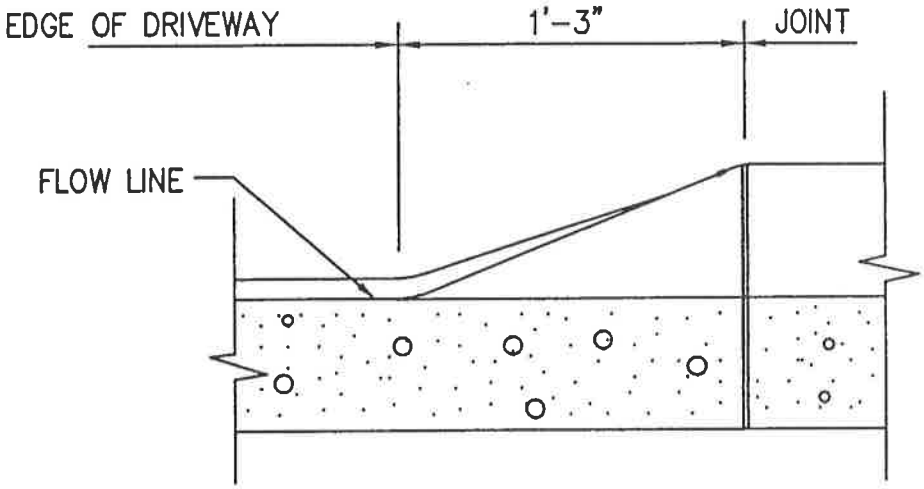

FRONT ELEVATION

CURB BREAK DETAILS

NO SCALE

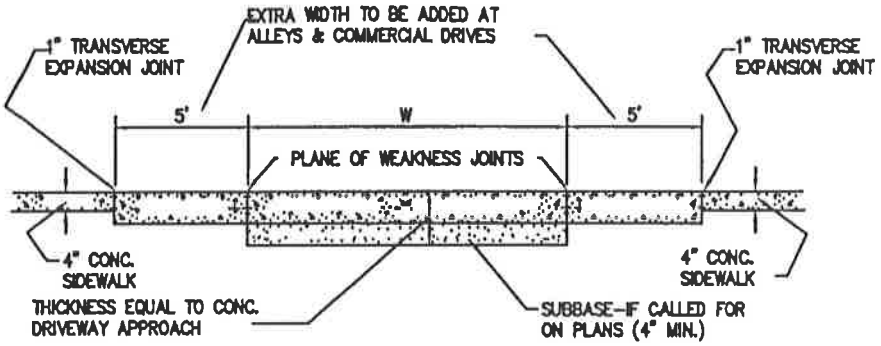

THICKENED CONCRETE SIDEWALK

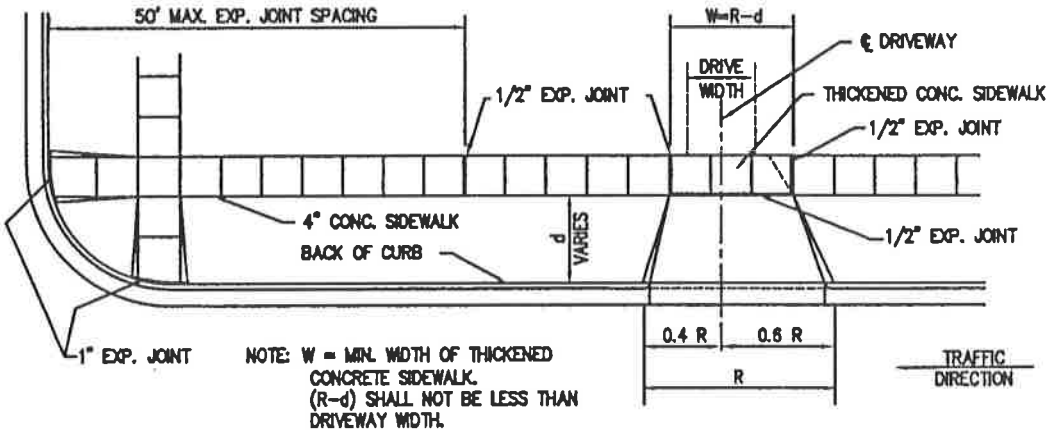

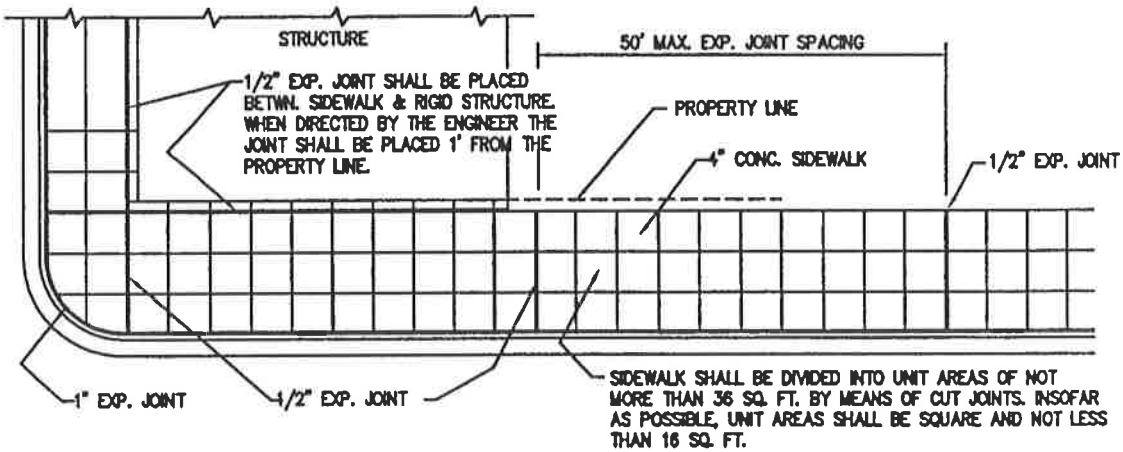

LOCATION OF JOINTS IN CONCRETE SIDEWALK

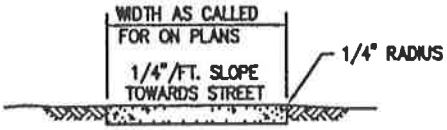

4" CONCRETE SIDEWALK

NOTES:
SIDEWALK TRANSVERSE SLOPE MAY VARY FROM ZERO TO 1/2" PER FT. TO MEET SIDE CONDITIONS. WHEN TRANSVERSE SLOPE IS LESS THAN 1/4" PER FT. LONGITUDINAL DRAINAGE MUST BE PROVIDED.
IN SETTING GRADES FOR COMMERCIAL DRIVES THE TYPES OF THE USING VEHICLES SHOULD BE CONSIDERED

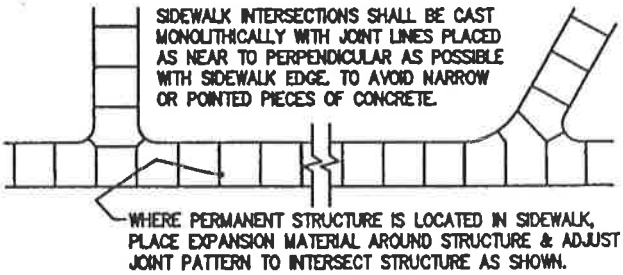

TYPICAL SIDEWALK JOINT LAYOUT

S:\2001\ \Details 6-10.dwg - SWdet A7

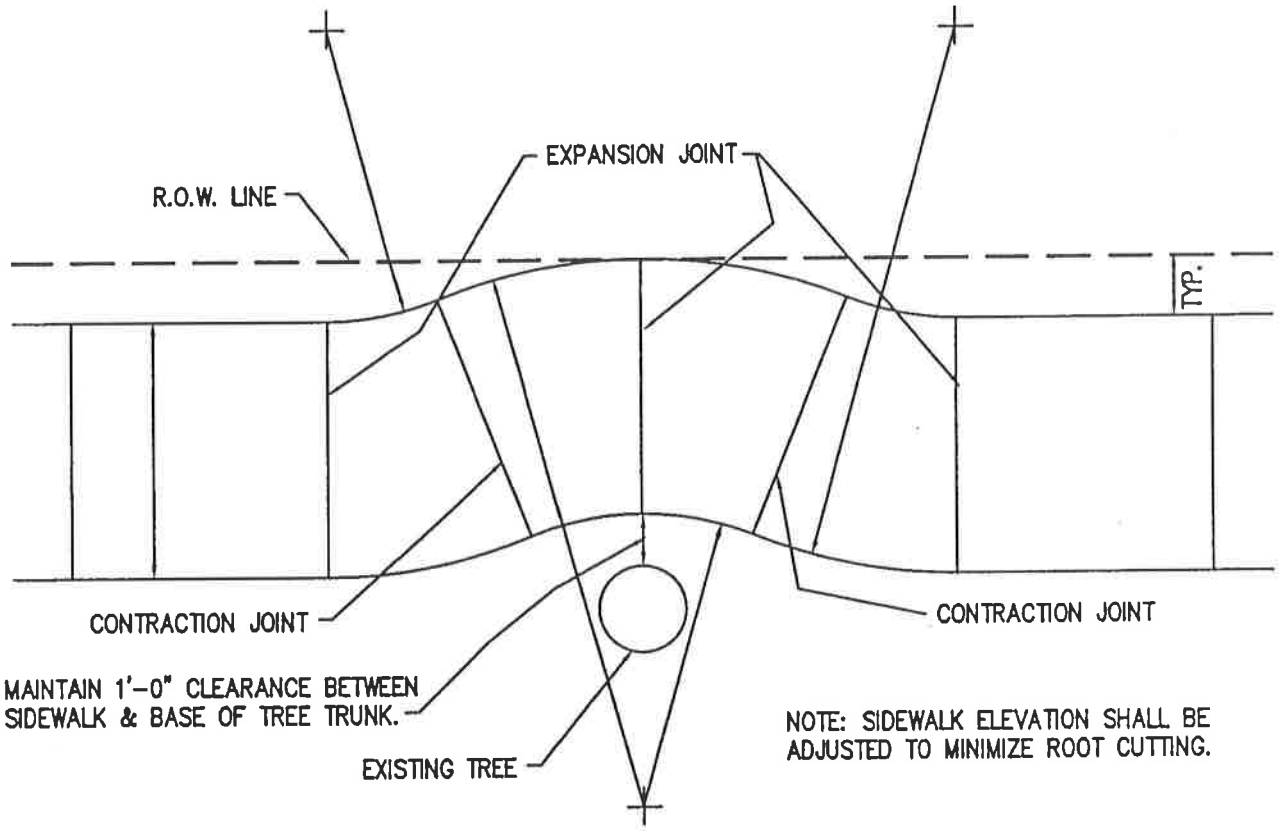

SIDEWALK ALIGNMENT AROUND TREES

NO SCALE

S:\2001\ \Details 6-10.dwg - SWtree AB